MALE END VIEW	FEMALE END VIEW	WIRING DIAGRAM

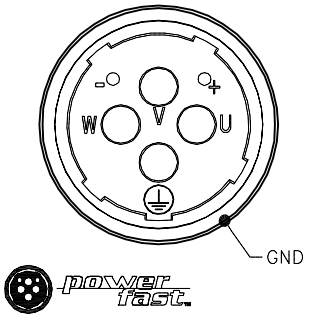

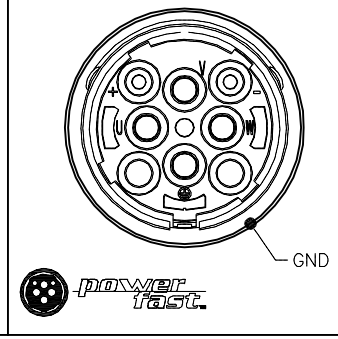

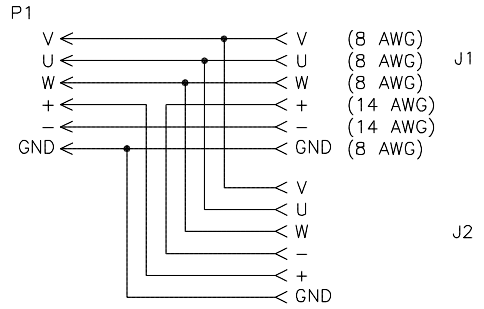

SPECIFICATIONS

CONTACT CARRIER MATERIAL	NYLON/BLACK
MOLDED MATERIAL/COLOR	POLYAMIDE/BLACK
CONTACT MATERIAL/PLATING	BRASS/GOLD
COUPLING NUT MATERIAL/PLATING	BRASS/NICKEL
RATED CURRENT [A]	35.0 A (8 AWG), 9.0 A (14 AWG)
RATED VOLTAGE [V]	600 V (8 AWG), 250 V (14 AWG)
TEMPERATURE RATING	−40°C to +90°C (−40°F to +194°F)
PROTECTION CLASS	MEETS IEC IP67

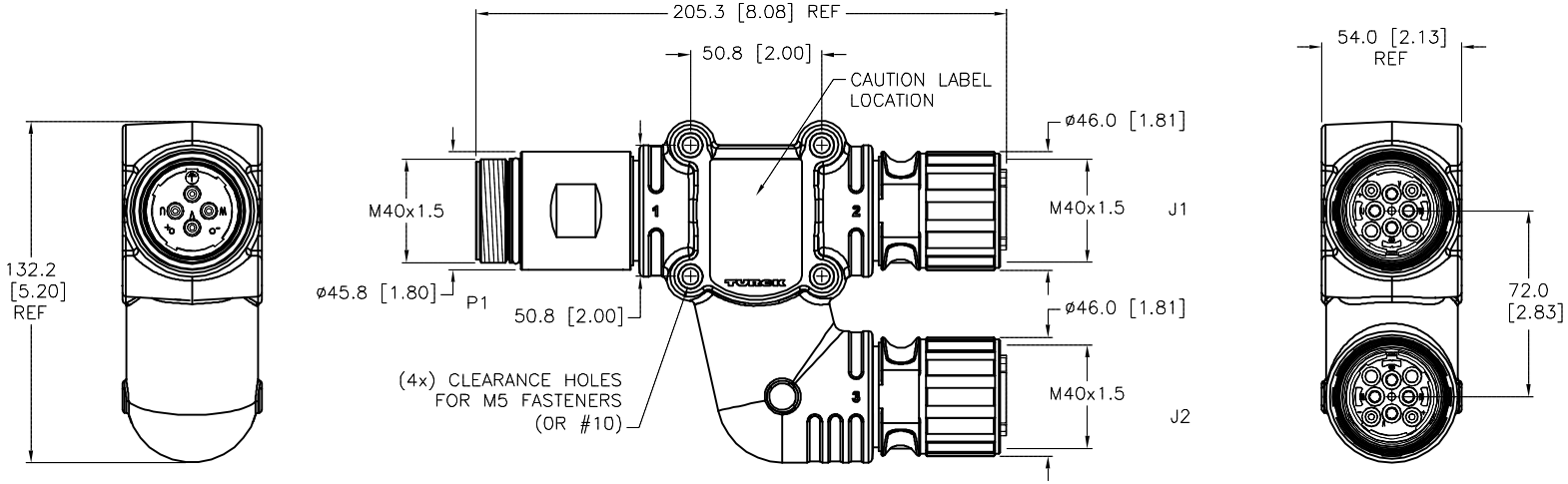

SOURCE DRAWING - FOR REFERENCE ONLY

CAUTION:
RISK OF ELECTRICAL SHOCK
DO NOT DISCONNECT UNDER LOAD

REV	DESCRIPTION	BY	DATE	ECO NO.
B	UPDATE KEYWAY ORIENTATION OF J1 CONNECTOR	RDS	11/13/14	47836

RELATED DOCUMENTS
1.
2.
3.
4.

3RD ANGLE PROJECTION

THIS DRAWING IS CONFIDENTIAL AND THE PROPERTY OF TURCK INC. USE OF THIS DOCUMENT WITHOUT WRITTEN PERMISSION IS PROHIBITED.

TURCK INC
High Technology Sensors and Automation Controls

3000 CAMPUS DRIVE
MINNEAPOLIS, MN 55441
1-800-544-7769
(763) 553-7300
(763) 553-0708 fax
turck.com

MATERIAL: SEE SPECIFICATIONS

FINISH: SEE SPECIFICATIONS

ALL DIMENSIONS DISPLAYED ON THIS DRAWING ARE FOR REFERENCE ONLY

CONTACT TURCK FOR MORE INFORMATION

DRFT: RDS | DATE: 11/01/11
APVD: J.B. | SCALE: 1=3.0

UNIT OF MEASUREMENT
MILLIMETER [INCH]
DO NOT SCALE THIS DRAWING

DESCRIPTION: SH-HSM/2 HKM 4824

IDENTIFICATION NO.: U2-19272 | REV: B

FILE: U2-19272 | SHEET 1 OF 1

Approved 11/18/2014, work order #66627 by J.B.